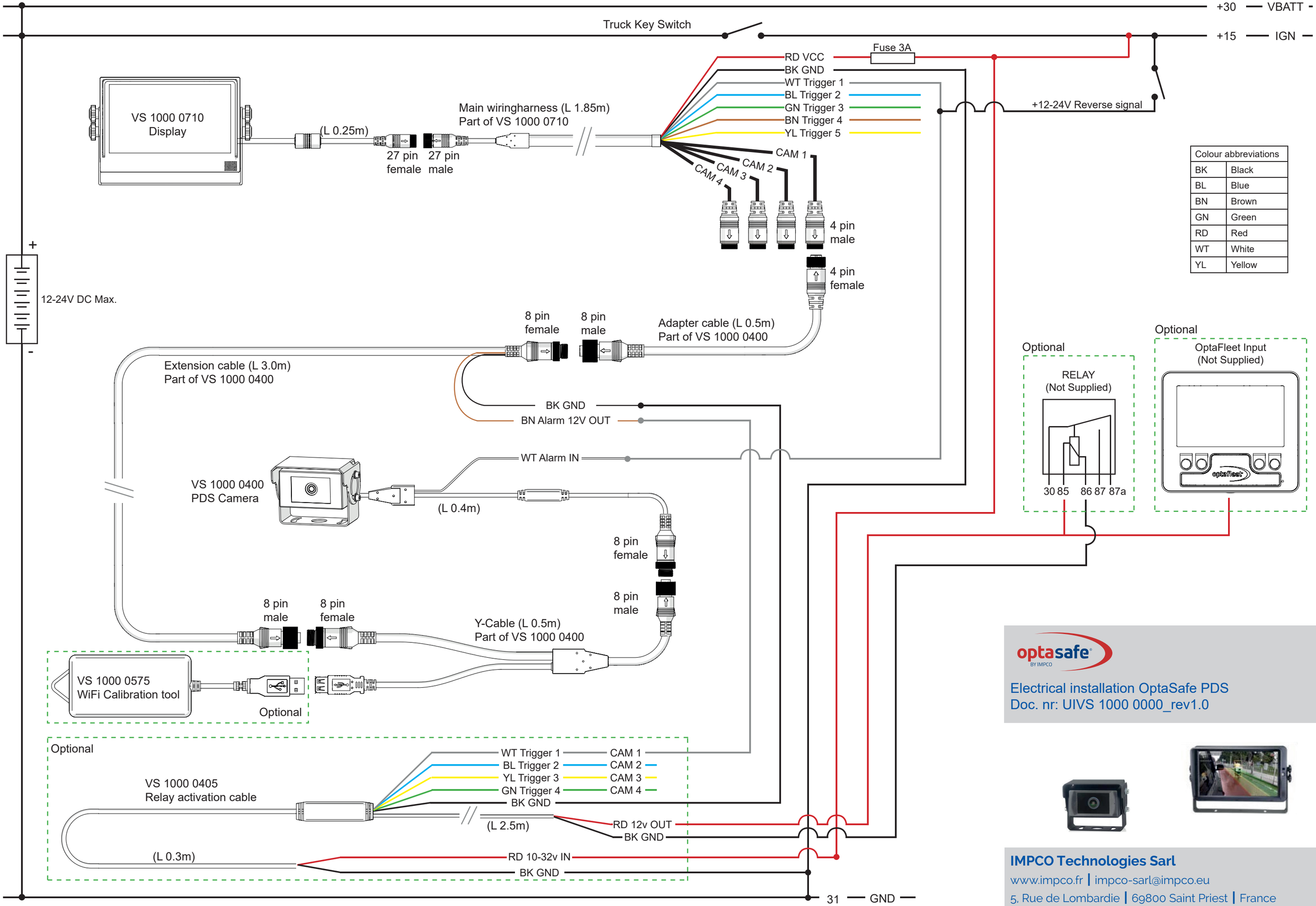

Colour abbreviations	
BK	Black
BL	Blue
BN	Brown
GN	Green
RD	Red
WT	White
YL	Yellow

optasafe BY IMPCO

Electrical installation OptaSafe PDS
Doc. nr: UIVS 1000 0000_rev1.0

IMPCO Technologies Sarl
www.impco.fr | impco-sarl@impco.eu
5, Rue de Lombardie | 69800 Saint Priest | France
Tél: +33 4 72 79 59 90

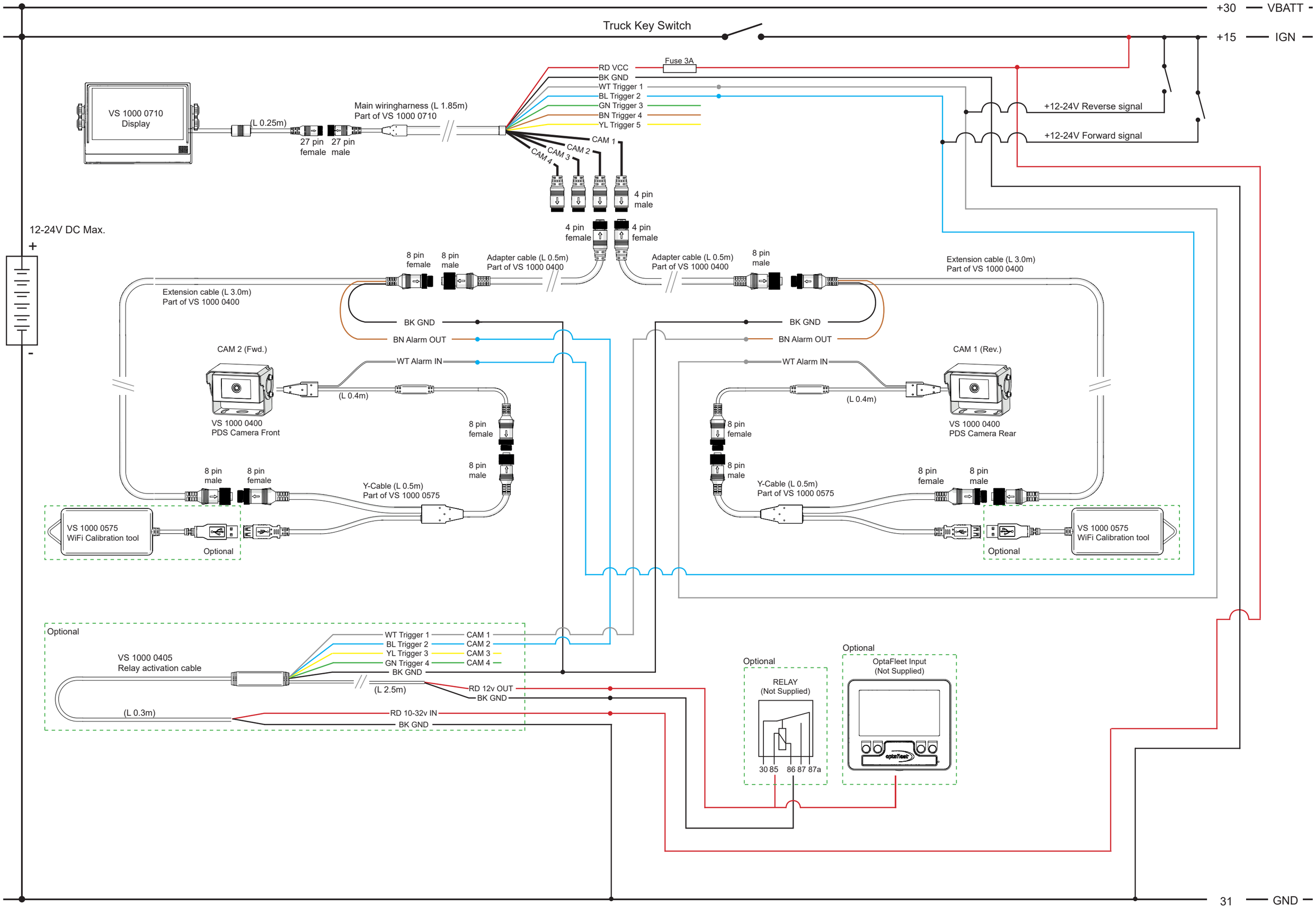
+30
VBATT
Truck Key Switch
+15
IGN
Fuse 3A
RD VCC
BK GND
WT Trigger 1
BL Trigger 2
GN Trigger 3
BN Trigger 4
YL Trigger 5
+12-24V Reverse signal
+12-24V Forward signal
VS 1000 0710
Display
(L 0.25m)
27 pin
female
27 pin
male
Main wiringharness (L 1.85m)
Part of VS 1000 0710
CAM 1
CAM 2
CAM 3
CAM 4
4 pin
male
4 pin
female
4 pin
female
12-24V DC Max.
+
-
8 pin
female
8 pin
male
Adapter cable (L 0.5m)
Part of VS 1000 0400
Adapter cable (L 0.5m)
Part of VS 1000 0400
8 pin
male
Extension cable (L 3.0m)
Part of VS 1000 0400
Extension cable (L 3.0m)
Part of VS 1000 0400
BK GND
BN Alarm OUT
WT Alarm IN
CAM 2 (Fwd.)
(L 0.4m)
VS 1000 0400
PDS Camera Front
8 pin
female
8 pin
male
8 pin
male
8 pin
female
Y-Cable (L 0.5m)
Part of VS 1000 0575
VS 1000 0575
WiFi Calibration tool
Optional
BK GND
BN Alarm OUT
WT Alarm IN
CAM 1 (Rev.)
(L 0.4m)
VS 1000 0400
PDS Camera Rear
8 pin
female
8 pin
male
Y-Cable (L 0.5m)
Part of VS 1000 0575
8 pin
female
8 pin
male
VS 1000 0575
WiFi Calibration tool
Optional
Optional
VS 1000 0405
Relay activation cable
WT Trigger 1
BL Trigger 2
YL Trigger 3
GN Trigger 4
BK GND
CAM 1
CAM 2
CAM 3
CAM 4
(L 2.5m)
RD 12v OUT
BK GND
(L 0.3m)
RD 10-32v IN
BK GND
Optional
RELAY
(Not Supplied)
30 85 86 87 87a
Optional
OptaFleet Input
(Not Supplied)
31
GND